ITEM NO.	PART NUMBER	DESCRIPTION	QTY.
1	CrosRed Base		1
2	CrosRed Arm	HOLLOW SEGMENTS WELDED TO CENTER CROSS-SEGMENT	3
3	CrosRed Center 1	CENTER CROSS-SEGMENT	1
4	CrosRed DecStep 1	DECORTIVE BASE-STEP	1
5	CrosRed DecStep 1	AT/BELOW-GRADE, FOR DECORTIVE STEP (#5)	1
6	CrossConcrete Base Redempt		1
	CrossConcrete base 5000psi Redempt	Concrete 5[ksi] 0.32[m3], 11.3[ft3]	1
	CrossRebar ring 1 Redempt	2024/6061 AL ROD OR REBAR 1/2"	4
	CrossRebar Vertical 1 Redempt	2024/6061 AL ROD OR REBAR 1/2"	1
	CrossBuried beam 1 Redempt	8"x0.5" AL 6061-T6	1
	CrossMounting Plates 1 Redempt	3/4" PLATE 6061-T6	1
	CrossMounting Plates 1 Redempt	3/4" PLATE 6061-T6	2
	CrossBolt ASM 3in 6061AL Redempt	2.5" MIN AL 0.5-13	12
	fastenal_0176235 Redempt	3"x(1/2")-13	1
	93286A049	Aluminum Washer	2
	90670A033	6061 Aluminum Hex Nut	2
	Shim 0.75x0.875x0.875 AL Redempt	6061 AL	1
	CrossRebar Vertical 1 Redempt	2024/6061 AL ROD OR REBAR 1/2"	1
	CrossRebar ring 1 Redempt	2024/6061 AL ROD OR REBAR 1/2"	5

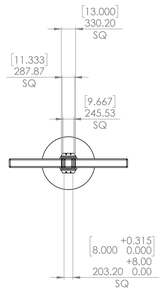

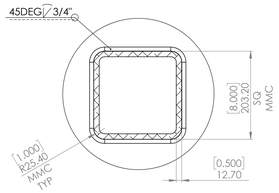

DETAIL D
SCALE 1 : 5

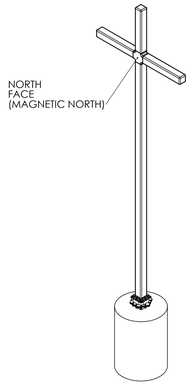

SPECIFICATIONS)
(1) ALL WORK SHALL BE COMPLETED/APPLICABLE TO 2024 IBC AND OSHA
(2) ALL WORK SHALL BE COMPLETED/APPLICABLE TO ALL OTHER APPLICABLE CODES
(3) ALL WORK SHALL BE COMPLETED/APPLICABLE TO ALL LOCAL CODES
(4) ALL PERMITS SHALL BE THE RESPONSIBILITY OF THE CONTRACTOR/S
(5) ALL SITE/FIELD MEASURMENTS SHALL BE FIELD VERIFIED PRIOR TO ON-SITE CONSTRUCTION
(6) CONTRACTOR/S SHALL BE RESPONSIBLE FOR MEASURMENT/PLACEMENT
(7) CONTRACTOR/S SHALL BE RESPONSIBLE FOR VERIFICATION OF STRUCTURAL STABILITY/PLACEMENT ON ALL SURFACES/SLOPES
  (1) VERTICAL MEMBERS MUST NOT SLANT
  (2) HORIZONTAL MEMBERS MUST NOT LEAN
(8) CONTRACTOR IS RESPONSIBLE FOR FIT/FINISH
  (1) NO DISJOINTED PARTS OR ASSEMBLIES
  (2) SURFACE ANOMOLIES/DISTORTIONS/DEFECTS
(9) FOR UNFORSEEN/UNEXPECTED SOIL DETRIMATES CONSULT SUPERVISING LEAD AND/OR ENGINEER
(10) UNREGISTERED/UNANTICIPATED EVENTS, STRUCTURAL OR OTHERWISE CONSULT SUPERVISOR
(11) FOUNDATION/S MOUNTING PLATES/FASTENERS MUST BE 2[IN] BELOW THE TOPSOIL/GRAVEL
(12) ROOF VERTICAL SUPPORTING MEMBERS ARE NOT TO EXCEED 12[FT] (3.66[M])

MATERIAL)
(13) MATING SURFACES SHALL NOT CONTACT DISIMMILAR METALS
(14) ALUMINUM RODS MAY BE USED IN PLACE OF REBAR, W/R ALUMINUM STRUCTURE/S
(15) CAST MATERIAL WITH Sy (YIELD STRENGTH) OF 22[KSI] OR GREATER IS ACCEPTABLE
(16) ALUMINUM STRUCTURAL STEEL 6061-T6 T651, Sy OF 37[KSI] OR GREATER IS ACCEPTABLE
(17) CONCRETE:
  (1) FOOTINGS MAY BE SQUARE
  (2) CONCRETE COMPRESSION STRENGTH 3,000[PSI]

SURFACE FINISH)
(18) SURFACE FINISH AS DEFINED BY ANSI B46.1
(19) NO DEFECTS, DEFORMATIONS OR SCRATCHES
(20) VISIBLE PARTS RECIEVE TEXTURE
  (1) VISIBLE SURFACE FINISH ROUGHNESS RA 120[μIN] (3[μM])
  (2) VISIBLE SURFACE FINISH ROUGHNESS RMS 132[μIN] (3.4[μM])
  (3) VISIBLE SURFACE FINISH FOR ROOF/STRUCTURE NASF-M12-P OR NASF-C22-P
  (4) MECHANICAL OR CHEMICAL NON-DIRECTIONAL PER RA & RMS
(21) NON-VISIBLE PARTS, CCAS MANUFACTURED, M10
(22) SIDE/TOP: NASF/AA-M12-C32-A44-P w/: {HTML/HEX0} 2A93BF (RGB of 42, 147, 191)
  (1) SKY BLUE COLOR (BLUISH-GREEN), CLASS I, THICKNESS, 0.7[mil] (0.0007[in] {17.78[μm]}) (MIN), ELEC-DEP COLOR: {HTML/HEX0} 2A93BF (RGB of 42, 147, 191)
  (2) FRONT/BACK (NORTH/SOUTH): NASF/AA-M12-C32-P (NO COLOR)
(23) NON-VISIBLE PARTS, AS MANUFACTURED, M10
(24) ALL VISIBLE PARTS, EXLUDING FASTENERS, RECEIVE TEXTURE
(25) SIDE LENGTH: 203.2[MM] (+8[MM]) (-0[MM])
  (1) THE INTENT IS TO MATCH THE GLORIOUS CROSS OF DOZULE
  (2) THE TARGET SIDE-LEGNTH IS 205[MM] OR 8.071[IN]

MATES/WELDS)
(26) WELD MATERIAL IS TO BE COMPATIBLE WITH MATERIALS
(27) Sy (YIELD STRENGTH) OF THE WELD MATERIAL IS TO BE GREATHER THAN THE MATING MATERIALS
(28) WELDS ARE TO BE CONVEX, MINIMUM OF 17% LARGER THAN THICKEST PART/PLATE
(29) NO WELDS ON ITEM 5 (DECORTIVE-STEP) OR ITEM 6

MISC)
(30) ALL BOLTS ARE TO BE DOUBLE-NUTTED: 1ST NUT (TO PART) AT 10[LBF-FT], 2ND NUT (TO NUT) AT 15 20[LBF-FT], NO SPACER BETWEEN THE NUTS

STATS/DATA)
(31) DATA IS MASTER
(32) BACKGROUND, DETAILS AND CALCULATIONS ARE LOCATED IN "Architectural Modeling 3 Crosses Rev 20--" (LATEST DATE - WORD/PDF DOCUMENT)
(33) WEIGHT OF THE CROSS OF REDEMPTION IS 470[KG] OR 1,030[LBF] (+/-10[%])

(34) MODELS OF THE CROSS OF REDEMPTION ARE LOCATED IN)
  (1) "Cross REDEMPTION ASM 1.zip"

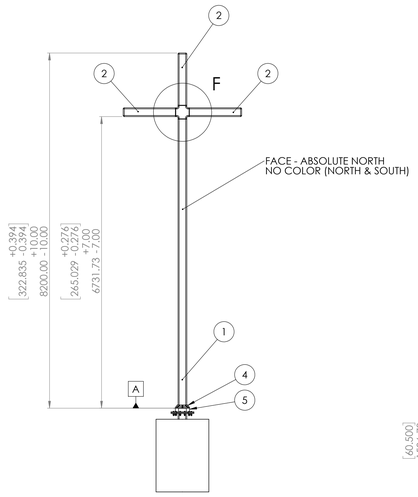

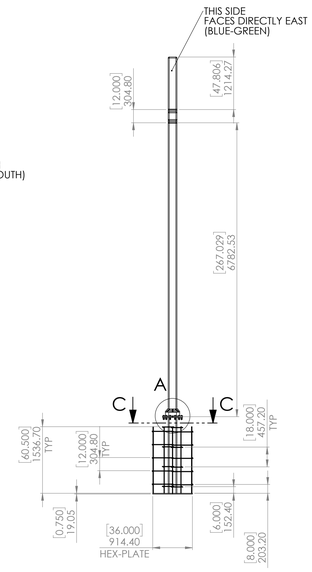

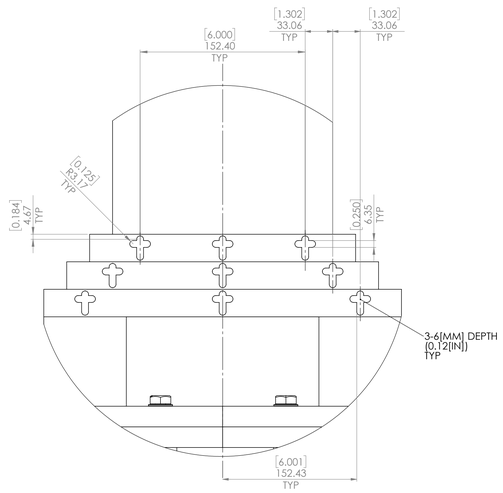

DETAIL E
SCALE 1 : 2

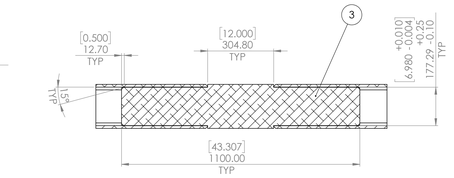

SECTION H-H
SCALE 1 : 10

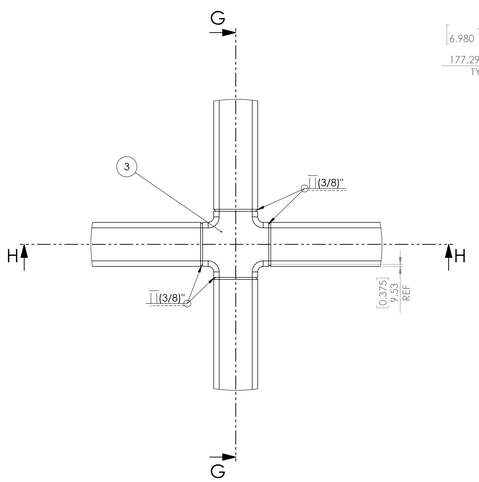

DETAIL F
SCALE 1 : 10

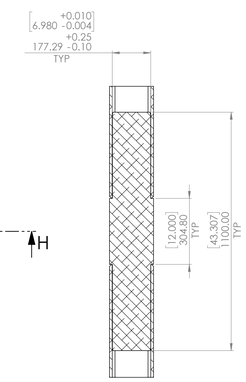

SECTION G-G
SCALE 1 : 10

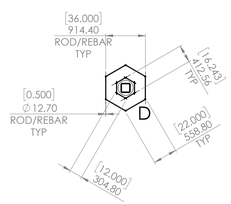

SECTION C-C

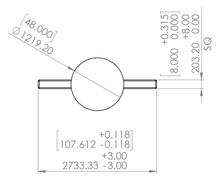

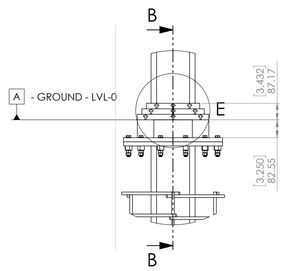

DETAIL A
SCALE 1 : 10

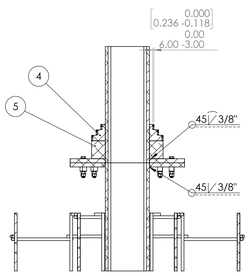

SECTION B-B
SCALE 1 : 10

GEORGIA REGISTERED No. PE052322 PROFESSIONAL ENGINEER DANIEL WIDHALM

31 Jan 2026

UNLESS OTHERWISE SPECIFIED: DIMENSIONS: [MM] - [SI] TOLERANCES: [+/-] [.XX]	LOCATION: 3554 WHITE RD NE, COWARTS, GA 30012 IN THE SOUTHEREN HEMISPHERE EARTH,SOLAR SYSTEM,MILKY WAY GALAXY, 33.42-32°N,83.5°-18°W[] M1: MECHANICAL, CLASS I S1: STRUCTURAL, CLASS I C1: CIVIL, CLASS I	DESIGN AND DRAW SHARP EDGES	DO NOT SCALE DRAWING / REVISION

	NAME	SIGNATURE	DATE
DRAWN			
CHK'D			
APPV'D			
MFG.			
Q.A.			

MATERIAL: SEE NOTES
WEIGHT:

TITLE: CREO DESIGNS

CROSS OF REDEPTION
HILL ON "THE FARM"

DWG NO. M2-S2-C2-001-0000 — A0

SCALE:1:50 — SHEET 1 OF 3